ISCC

Inter-Society Color Council Newsletter

NUMBER 226
September-October 1973

TABLE OF CONTENTS

Number 226–September-October 1973

	Page
ISCC Board of Directors Actions	1
Granville Library Given to Museum	1
W. D. Wright Retires	1
Warren B. Reese, New Appointment	2
Products and Services	
Hale Color Consultants	2
Omission	2
Environmental Information on Chemical Composition of Photo Processing	2
Appearance—The Mar-Lun Project	2
Wiley-Interscience Announcement	4
Pre-Press "Image Assembly" Conference	4
From the Editor	4
ChromaSCAN™ Spectrophotometer/Colorimeter	5
Colorama	5
ISCC Symposium Abstracts of Papers, Annual Meeting, May 1, 1973	5
Graphic Arts Oddities	8

COLOR REPRODUCTION

The color insert is again donated by Progressive Color Corporation of Rockville, Md., by permission of National Wildlife Magazine, from the issue of Dec/Jan., 1973, page 35, copyright, National Wildlife Federation—1973.

The legend reads: "Orphaned baby barn owls were photographed by Lois Cox of Duarte, California, when a friend was able to care for them until they were old enough to fend for themselves."

COVER DESIGN – DONALD M. GENARO AND VALERIE PETTIS OF HENRY DREYFUSS ASSOCIATES, NEW YORK CITY
COVER PRINTED BY PROGRESSIVE COLOR CORPORATION, ROCKVILLE, MARYLAND
COVER STOCK – OXFORD STARFLEX GLOSS ENAMEL
COURTESY OF OXFORD PAPER CO., DIVISION OF THE ETHYL CORP., RICHMOND, VA.
CONSULTANT – MIMEOFORM SERVICE, INC., WASHINGTON, D.C.

ISCC BOARD OF DIRECTORS MOVES TO ORGANIZE INDIVIDUAL MEMBER DELEGATION AND TAKES FIRST STEPS IN PREPARING FOR THE 1977 AIC COLOR CONGRESS IN TROY, NEW YORK

At its October 11, 1973 meeting in Rochester, New York, the ISCC Board of Directors took two important steps toward the future.

The Board of Directors voted to study the feasibility of a special organization within the Council wherein Individual Members may participate by expressing opinions, asking questions, describing their work, etc. This decision of the Board of Directors is a specific attempt to fulfill my request when I became President for a mechanism permitting individual members of ISCC to participate more fully in the affairs of the Council. Leonard Davidson, Chairman of our By-Laws Committee, N.L. Industries, Inc., P.O. Box 420, Hightstown, N.J. 08520 is initiating this study. If you have suggestions or questions which you wish to have considered, I suggest that you get in touch with Mr. Davidson.

The second important action concerns the 1977 Quadrennial Color Congress of the AIC. At its meeting in York, England, this past July, the AIC agreed to accept the invitation of the ISCC to hold the 1977 meeting at Rennselaer Polytechnic Institute, Troy, New York. Our offer was accepted. At Rochester we made the first plans for what I am convinced is going to be an exciting and tremendous Color experience.

In a later Newsletter we will be able to identify the names of specific Committee Chairman. It is not too soon for us to start thinking about how we are going to accomplish all the many tasks which must be done if we are to have the biggest and best AIC Congress ever at Troy, New York. Those of you having ideas for special events, either technical or in the entertainment area, should be organizing these ideas in your minds for presentation to the appropriate committee chairman at the Annual Meeting of ISCC to be held in New York, April 29 and 30, 1974.

R. S. Hunter, President

GRANVILLE LIBRARY GIVEN TO MUSEUM

The Cooper-Hewitt Museum announces the receipt of an extremely important gift during the past year, the entire specialized color library of Walter C. Granville, consisting of over 320 titles, some of which are rare, and a few unique in this country. Eighty-six of the items are accompanied by separate charts, swatches or chips, sometimes numbering as many as several thousand each.

The Library is of international scope, and includes many of the basic books for color study. Among the many authors represented some of the more familiar include Arnheim, von Bezold, Birren, Chevreul, Frieling, von Helmholtz, Helson, Hering, Judd, Munsell, Ostwald, Ridgway and W. D. Wright. *L'optique des Couleurs* by R.P.L.B. Castel, 1740, is perhaps the earliest work, and several publications by the chromotherapist Ernest J. "Rainbow" Stevens are an amusing addition.

Documentation of the development of Walter Granville's own work, the *Color Harmony Manual,* including all editions, and alternative and trial samples, along with a summary of publication dates and other historical annotations is included.

Other important references for color research are the several runs of journals, including the ISCC *Newsletter,* 1933-1972, The Optical Society of America *Programs,* 1937-1972 and *Color News* of the Munsell Company, 1924-1926.

The Museum hopes that this considerable addition to its color library will encourage others to add to it with significant works in all aspects of color study.

W. D. WRIGHT RETIRES

As we note from a recent Colour Group notice, September, 30th marked the end of an era. (Ref. NL 225, July-August, 1973.) On that day Dr. W. D. Wright retired from the chair of Applied Optics of Imperial College. He will continue with his Delhi committee work, so will be occasionally available at the college. And this year he is chairman of the British Colour Group, so – with a number of other projects he has in hand – we doubt if he will have nearly the leisure that he may have expected!

On the evening of July 11 a very happy retirement dinner was given him, mainly a college affair attended by the Optics and Physics staff and students and some of the Administrative staff. Another party, scheduled for September 26, was arranged by Dr. Ruddock mainly as a "Colour" dinner, with former color research students and some of his color friends 'like Gordon Chamberlin.'

An early September letter says that he has not yet cleared out all his books, papers, etc. from college, but hoped to have it done by the end of that week. He found it an exhausting business, but has made quite a nice study at home. He expressed disappointment at hearing that the ISCC Williamsburg meeting had been postponed for he had planned to come, and looked forward to visiting Williamsburg again, and to meeting many of his American friends there.

We wish for him a long and happy retirement, and the successful accomplishment of as many projects as he sees fit to undertake. We also hope that we may see him in this country some time before too long.

Dorothy Nickerson

Editor's Note

Although Professor Wright's retirement was announced in the last issue, it seemed appropriate to publish Miss Nickerson's more personal contribution, based on her long association with him.

R.W.B.

WARREN B. REESE NEW APPOINTMENT

Warren B. Reese of Newburgh, Treasurer of ISCC, has been named president and chief operating officer of Laser-Graphic Systems Inc. (LGS) of Sudbury, Mass., developer of the Laser-Plate for newspaper printing presses. Announcement of his appointment was made jointly by Allen H. Neuharth, president and chief executive of Gannett Co. Inc., and Seymour L. Linfield, LGS chairman and chief executive. Reese has been with Kollmorgan Corp. of Hartford Conn., since 1950, most recently as senior vice president. Last December Gannett announced that it had invested in research of the Laser-Graph system to produce printing plates through a series of non-polluting, non-chemical multiple laser beams directly from photo-composed paste-ups of newspaper pages. This eliminates both photograph negatives and all hot metal from composing room to press room.

PRODUCTS AND SERVICES

Hale Color Consultants

W. N. (Nick) Hale, long an active participant in solving ISCC problems, has left the Munsell Color Company, and formed his own consulting group.

He has described his operation as follows:

I have a small color lab where I do some minor color matching and production, and my office here is fixed to do visual work as well as some densitometry. For more extensive color matching and production I have a working agreement with a local color card company.

Henry Hemmendinger (R. D., Pequest Bend, Belvidere, N. J. 07823) does all my spectrophotometry, color difference computation (for those who believe in such things) and he can also do some formulation.

I have a few stock items that I know selected customers require on a recurring basis, and others which represent over-runs of custom productions, but in general I am doing consulting which consists of visual and instrumental evaluations, selections of materials and processes, production of custom solutions to problems and similar matters. Much the same as I did for Munsell, less the great bulk of stock items.

Nick Hale
Hale Color Consultants, 1220 Bolton St., Baltimore, Maryland 21217, 301/669-8631

Omission

In the last issue No. 225, July-August, 1973, under "Products and Services", the address of the Polychrome Corporation was inadvertently omitted. My apologies. Their address is

Polychrome Corporation
On the Hudson
Yonkers, N. Y. 10702

Environmental Information on Chemical Composition of Photo Processing Solutions

The general composition of wastes from photographic processing solutions is outlined in a new Kodak publication.

The six-page reference, "Chemical Composition of Photographic Processing Solutions," (Kodak publication No. J-47) is twelfth in the continuing series, "Information for a Cleaner Environment from Kodak." The series is designed to help photographic processors and other users of photographic materials to support actively today's growing need for a cleaner environment.

Two tables, one applying generally to black-and-white, color and graphic arts processing solutions and the other relating to solutions used in lithographic plate processing, are listed in the new publication for the information of engineers or administrators of municipal waste treatment plants. These solutions include developers, stop baths, fixers, bleaches, clearing baths and washing agents, hardeners, neutralizers, stabilizers, lacquers, desensitizers and other processing agents.

The tables attempt to provide such information in meaningful form. For broader coverage, they also include some chemicals that are not present in Kodak packaged processing chemicals but which may be used in some form in photographic processing.

Although the tables do not list all chemicals in all processing solutions, they relate the types and concentrations of chemicals most commonly used. In addition no one processing solution necessarily contains all of the chemicals listed in any one category. The listing of a chemical simply means that it may be present and, if so, is probably in the range of concentration shown.

Some of the chemicals are classified as a group rather than as a specific compound. In some cases, these chemicals are widely used in the chemical industry and in many household products.

Other chemicals are listed in more than one concentration range in the tables. When they are commonly used over a very broad range of concentrations, the tables show this wherever it applies.

As it is customary for processors to discharge several processing solutions simultaneously, together with wash waters, this practice contributes to the concentrations of each chemical. Generally, the mixture of wastes has a pH range of 6.5 to 9.5. The amounts of processing wastes discharged in any given period of time, however, depend upon the amounts of papers and films processed. In addition, the

APPEARANCE

In the interest of those concerned with appearance as well as color, the accompanying figure by Jesse Hathaway is included.

Drawings by Jesse Hathaway

With the successful completion of the recent Apollo missions, the Mathematics Department of Compton College released details of the MAR-LUN Project which played an important role in our space missions. The project was the outgrowth of the casual discovery by a team member of a drawing, reproduced below, which was found to be a sketch of an experimental sensor. The subsequent designs of the sensor reflect the steps taken to develop means of landing this equipment on planets in outer-space. The final sleek modern design includes built in motion to achieve stability in space.

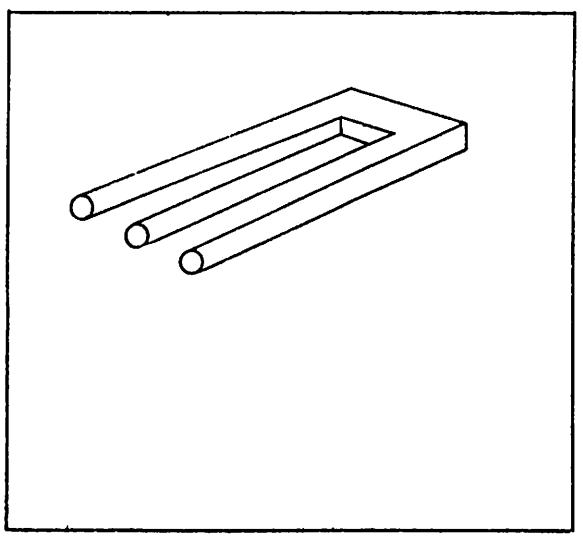

Figure 1
Original inter-planetary sensor

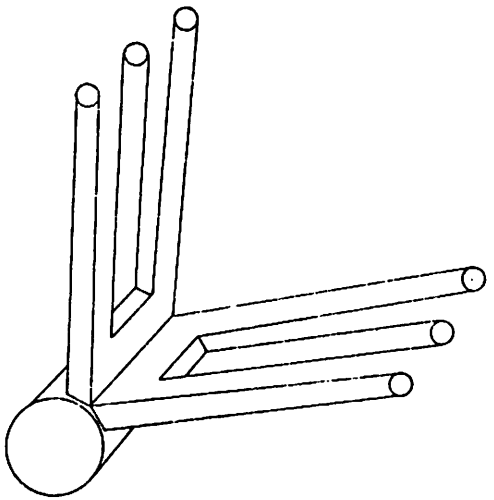

Figure 2
The Lunar Probe proved to be effective but developed severe oscillations and became unstable in weak gravitational fields.

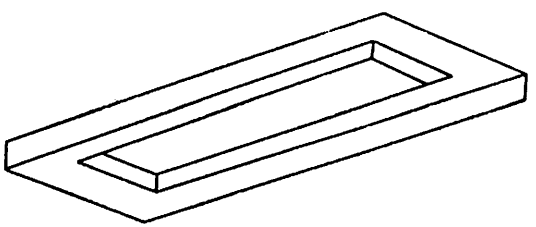

Figure 3
Two dimensional stable platform for the support of the lunar-space probe

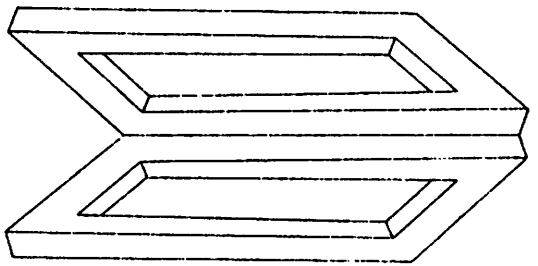

Figure 4
Duplexed stable Platform which replaces earlier single base. Increased stability makes this design more attractive

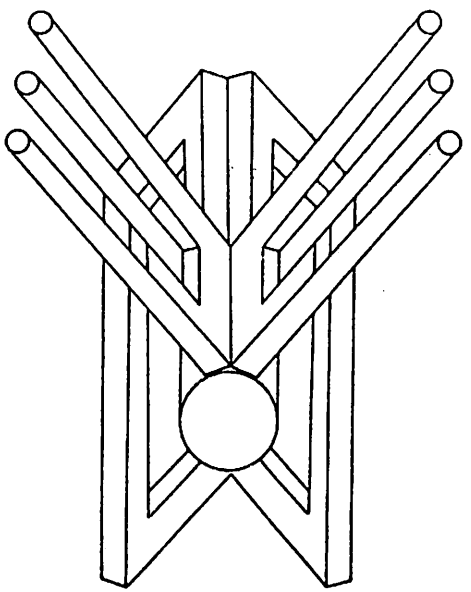

Figure 5
Final MAR-LUN Sensor. A highly stable yet flexible device.

amount of other water wastes that flow into the same sewer system also must be considered.

The newest publication in the environmental series is available to users of photographic chemicals, pollution and sanitary control engineers, and appropriate government agencies. New titles are expected to be added to the growing series as improved treatment and disposal methods and products are developed.

Single copies of the booklet may be obtained without charge by writing to: Eastman Kodak Co., Dept. 412-L, 343 State St., Rochester, N.Y. 14650.

Wiley-Interscience Announcement

Pigment Handbook: Volume I: Properties and Economics; Volume II: Applications and Markets; Volume III: Characterization and Physical Relationships, Edited by Temple C. Patton

Was that last white you mixed just a little off?-and you don't know why? You may have used the wrong kind of pigment for the product you were coloring . . . or the improper formula. The possible reasons for error are too numerous to list here, but you now have the chance to look at the *Pigment Handbook* which has more than 2,000 pages about every aspect of pigments—from their manufacture to ultimate use. This unique book could be just the thing you're looking for to help you get the right color mix to give your product that extra bit of class.

Or, if you're selling pigments, you can help your customers by having—with this one complete source—the answers to their questions today, and not "in a couple of days" or "maybe next week." Whatever your role in the pigment industry, now is your time to take advantage of Wiley's special offer to review and keep this book.

Based on the extensive research and experience of more than 135 specialists, this three-volume text includes all the current knowledge on pigment technology, pigment application, pigment theory.

Volume I provides essential information on the nature of individual pigments, including their physical and chemical properties, historical background, major reasons for use, method of manufacture, grades, specifications, and manufacturers. An economic section is included for each pigment so that you will know how much a particular pigment costs, or whether it is a new or phased-out product.

Volume II considers major commercial applications, showing how each pigment may be used in different situations, what pigment properties are required and where, and how proper pigmentation, formulation techniques, and other methods affect pigment properties.

Volume III, aimed at the needs of the researcher and development groups, examines such topics as particle size, pigment geometry, esthetic appeal, rheology, and corrosion inhibition. Wherever appropriate, workable equations are provided.

Systematic and lucidly written, the *Pigment Handbook* will be an invaluable sourcebook for those involved with all color pigments in such fields as plastics, cosmetics, foodstuffs, textiles, ceramics, and artists' colors. Because of its breadth and depth of coverage, it will also provide a ready reference for researchers in the field.

Highlights of the Pigment Handbook

- discusses all pigments manufactured in the United States—plus pertinent details on imported pigments
- considers major technological and theoretical applications
- contains over 700 graphs and figures
- written by more than 135 authorities in the field

For further information write:

Wiley-Interscience
Post Office Box 4569, Grand Central Station
New York, N.Y. 10017

Pre-Press "Image Assembly" Conference

The Graphic Arts Technical Foundation has announced a winter Pre-Press Conference entitled, "Image Assembly—We Used To Call It Stripping", (announced by William H. Smith, ISCC Delegate from GATF).

In making the announcement, Mr. Smith said, "Scheduled for December 5, 1973, in Philadelphia, Pa., the program will focus on the rapidly changing area of stripping or 'image assembly' as GATF has designated the subject area. Designed for management and line supervision, the program will discuss the worker/systems revolution in the specific craft-oriented production area of stripping. Speakers will discuss modern concepts of organizing and reorganizing craft-oriented stripping operations to adjust to semi-automated and automated image assembly devices, which would include pin register systems, image assembly by scanner, projection platemaking, and image assembly through video display.

For further information concerning the GATF winter Pre-Press Conference, contact: Special Programs Department, GATF, 4615 Forbes Ave., Pittsburgh, Pa. 15213.

FROM THE EDITOR

In the first issue I published, No. 204, January-February 1970, I quoted at some length from the very first issue, published by M. Rea Paul on October 16, 1933. I think, with this issue, it is appropriate to quote again a portion of what Rea Paul said in 1933.

"To be successful in disseminating information, these *News Letters* must look to you for further contributions from month to month. It will continue to be furnished you as long as you continue to furnish the necessary material of which it is composed."

'Nuff said!

R. W. Burnham, Editor

ChromaSCAN™ Spectrophotometer/Colorimeter

Just introduced, the Diano ChromaSCAN™ is a fully automatic, dual beam (color) spectrophotometer/colorimeter designed for the production and laboratory applications of all industries where measurement and control of color is important.

Its features include expanded photometric and wavelength ranges, a newly designed illuminator positioned external to the integrating sphere, a new long-life Quartz-Tungsten-Halogen lamp, Illuminant D-6500 with and without ultra-violet and Illuminant A with heat absorbing glass to minimize sample heating as well as small sample measurement capability.

For complete information, specifications, and prices, write for Bulletin 347.

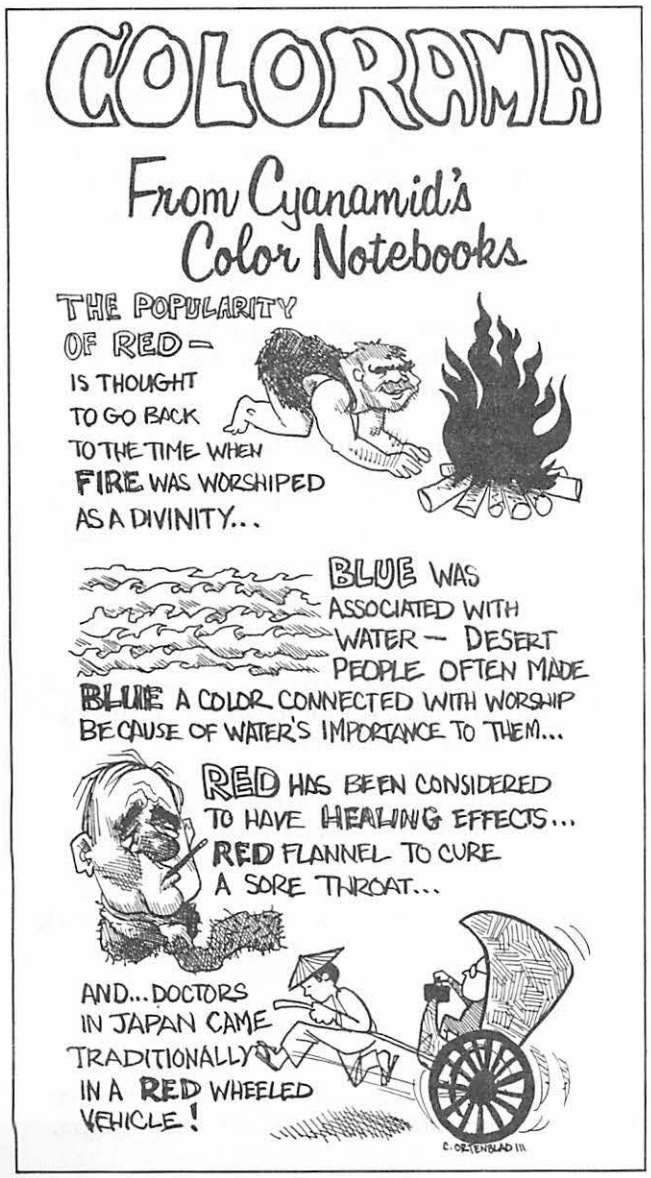

Reproduced with permission of American Cyanamid Company

ISCC SYMPOSIUM ON PROFESSIONAL EDUCATION IN COLOR FOR ART AND TECHNOLOGY

Abstracts of Papers

Annual Meeting, May 1, 1973
Statler-Hilton Hotel, New York

Introductory Remarks, Richard S. Hunter, Hunter Associates Laboratories, Fairfax, Virginia

In the process of living, most of the information which comes to people and most of the decisions they make are based upon what they see. What people see is perceived by means of the color and related appearance attributes of objects and materials. The 1973 Annual Meeting Symposium of the ISCC is concerned with 1973 professional education in color and related attributes of appearance.

Although information comes to people by way of their eyes, the average layman is normally unaware of the specific aspects of color and appearance responsible for his recognitions. Rather, he sees objects as ripe, unripe, or rotten; slippery or rough, desirable or undesirable, and so forth. In other words, the visual information coming through the eyes is translated by the observer directly to experience with the products. The layman is totally unaware of the intricacies of color and the other attributes of appearance by which he makes his judgements about the things he sees.

In order to develop and control color and appearance, however, we who are experts in the field have to understand something of the nature of appearance. The subject is broad with many facets and most of us who call ourselves experts are actually experts in only one small segment of a very large subject.

By presenting a seminar on 1973 education in color, we hope to identify some of the basic concepts now being covered in college courses on color, and at the same time to show the breadth of the whole subject and thereby broaden the capabilities of many of our present experts on color. With broader appreciation of this field of effort, the effectiveness of the ISCC membership should grow.

Color Education in Different Departments of the Rochester Institute of Technology, Paul E. Duran, Rochester Institute of Technology, Rochester, New York

Color education at RIT will be reviewed in terms of course offerings in the various colleges and departments.

Initial discussion will involve those courses in which color is taught as a pure science; then courses concerned with applications of the science of color will be discussed. This will lead to the description of more general courses dealing with color from both pure and applied aspects in both science and art areas. Most of the color courses offered at RIT fall into this category, where the teaching begins with some discussion of color theory and proceeds to ap-

plied topics such as color in textiles, color in painting, color in photography, color as a factor in food acceptance and palatability, etc. The final major classification of color courses at RIT involves those dealing with color from a qualitative visual standpoint, being primarily concerned with psychological effects of color.

The various color-related courses currently offered have several topics in common. Most of the courses, for example, discuss basic additive and subtractive color mixing theory, some fundamental color classification systems, etc. The practical advantages and disadvantages of an interdepartmental color course at RIT will be discussed.

Color Course for Students of Fine Arts at Queens College, Herb Aach, Queens College, Flushing, New York

While primarily intended for Fine Arts Majors, the course nevertheless serves the larger community of the college population. It is designed as a well-rounded program for all those who seek information on color regardless of ultimate aim. As such, it covers not only its involvement in art, but also its corollaries in physical, psychological, physiological, phenomenological and perceptive factors. Discussed briefly here is a short history of the course, the student population, the purposes of the course and its results, its programmatic structure, and (time permitting) a quick review of examples covering the actual problems within the course.

Graduate Education in Color Science and Technology at Rensselaer Polytechnic Institute, Fred W. Billmeyer, Jr., Department of Chemistry, Rensselaer Polytechnic Institute, Troy, New York 12181

A curriculum has been developed and utilized for education of scientists and engineers in color science and technology, at the postgraduate and advanced undergraduate levels. This program has been in operation for eight years, during which time three Ph.D. and two M.Sc. degrees have been granted, and ten undergraduate theses or projects have been carried out. One postdoctoral fellow, two adjunct professors, and two professors (one full time) have participated, and six graduate students are now active. In addition, a program of continuing-education short courses has been in operation for eight years, with over 600 industrial scientists participating.

The core course of this curriculum, open to advanced undergraduates and graduates, is a general review of color science using Billmeyer and Saltzman's "Principles of Color Technology" as the textbook. This course also serves as a prerequisite to graduate-level courses. Several of these have been given, including "Reflectance Spectroscopy," Industrial Color Technology," and "Radiometry." Suitable textbooks have not always been available, and in one instance the preparation of a new textbook is in progress. Detailed syllabi have been prepared for several other courses, with the result that a well-rounded curriculum is available, any course in which can be taught on demand.

Support of this program, particularly in curriculum development, by the National Science Foundation under Grant GZ-1801, is gratefully acknowledged. This is Contribution No. 52 from The Rensselaer Color Measurement Laboratory.

Teaching Dyanamics in Color Education at the University of Cincinnati, Isay Balinkin, University of Cincinnati, Cincinnati, Ohio

All freshmen majoring in Design, such as Industrial, Advertising, Costume, Interior, and Art Teacher Education in the College of Design, Architecture and Art, are required to take a course in Principles of Physics. It runs for 90 contact hours and about one half of this time is devoted to the study of several chapters of *An Introduction to Color* by Ralph M. Evans. The central theme of the course is that color begins with the study of light sources, followed by the modifying characteristics of colorants, then the sensory mechanism of the human eye and finally the mental perception of the observer. Free use is made of spectral curves to bring forth the physical, chemical, physiological and possibly the psychological aspects of color. Each lecture is illustrated with experiments and demonstrations properly selected from an arsenal of about two hundred pieces of equipment. A Rapid-Scan Spectrophotometer is used to great advantage. Slides and some of the demonstrations will be shown.

Color Content of Courses in Psychology at the University of Pennsylvania, Leo Hurvich, University of Pennsylvania, Philadelphia, Pennsylvania

Our formal teaching of color vision takes place primarily in the context of a one semester sensation and perception proseminar for graduate students in the psychology department. By a combination of lectures, discussions, and readings of both summary chapters and original research reports, we try to provide a review of systems of color specification, including CIE, and of some basic psychophysical measurement techniques and empirical data for both normal and deficient color vision. The psychophysical material is then related to color theory and to the current knowledge of receptor photochemistry and visual anatomy and neurophysiology. Where possible, laboratory demonstrations are introduced in addition to slide material. We also try to point out those issues and mechanisms of color vision that share common features with other sense modalities or even other areas of psychology. In more advanced seminars with graduate students we inquire more intensively into specific issues, e.g., neural mechanisms of quality coding, interpretation of increment threshold data, and so on.

Teaching Color Use in Design of Man's Living and Working Environment at the Ontario College of Art, Mary A. Egan, Ontario College of Art, Toronto, Ontario, Canada

This approach to color is from the viewpoint of its meaning to people and its use as a resolution of needs, directed

in application to environmental design. Awareness, sensitivity, and knowledge in the color field develop objective criteria for this purpose.

The visual and associational factors are the main emphasis, including interaction, light, space, attitude, and trends. Related qualities of texture and scale are considered.

The framework of color aspects of physics, physiology, perception, and measures as vocabulary is introduced. The practical: properties, availability, application, cost are surveyed.

The development of the individual in the "free school" context aims towards the understanding of an area. Color expertise is in visual communication and application, and with awareness of consulting and working with technical sources as a team.

Laboratory Instruction in Color and Lighting for Students and Professional Consumer Consultants at the Colorado State University, Millicent Russell, College of Home Economics, Colorado State University, Fort Collins, Colorado

During the past academic year, Colorado State University has introduced an innovative program in Color and Lighting based on a laboratory for use by undergraduate and graduate students, by university faculty and staff, and by consumer science professionals from business and industry. The laboratory, designed jointly by University faculty and a professional color and lighting consultant, is directed by a Project Team drawn from five academic departments, principally the Department of Consumer Sciences and Housing.

During any academic year about fifty upper-division undergraduate students will participate in the course entitled COLOR, LIGHT AND THE INDIVIDUAL, requiring formal lecturing, discussion and laboratory demonstration. The course is a basic survey utilizing senior-level university texts not relying heavily upon physics and mathematics, but dealing exclusively with physiological, aesthetic, and psychological theories of color and light. Graduate students at the masters' level utilize the laboratory in developing simplified demonstration materials for use in undergraduate courses and in conducting project activity relating to their personal research programs.

Research and development projects include psychological reaction to color, control of color and lighting in living spaces, and effects of different spectral distribution of luminaires on varying skin tones. Extension of the present program includes the introduction of color television and other automated educational techniques for on-campus and off-campus consumer education. The evaluation of the impact of the program in color and lighting will focus on a liaison with business, industry, and consulting agencies who employ consumer scientists.

Color Courses Related to Food Science and Technology at the University of Massachusetts, F. J. Francis, University of Massachusetts, Amherst, Massachusetts

The teaching of color in Food Science and Technology is related to the needs of the industry in two general areas: product acceptability and food research. The first area is far larger than the second. Color is one of the three major quality attributes of food: color, texture, flavor. In degree of development of instrumentation, they probably rank in the above order. Many food industries use color as an index of consumer appeal and product quality. In terms of probable research input into development of colorimetric techniques, the product areas may be tomatoes, sugars, flour, citrus products, other fruits, other vegetables, meats, oils, etc. Each commodity area has its own techniques and interpretations for both product control and research. The research interpretations of color data for both improvement and deterioration of food quality are well developed in a number of areas. Teaching of color courses in food science departments reflects the above aims dependent on limitations of time and expertise.

Education at the Color Science Center of Clemson University, Frederick T. Simon, Textile Department, Clemson University, Clemson, South Carolina

Clemson University has a long tradition in teaching color in connection with its textile curricula which dates back into the early 1900's. Textile design and dyeing courses have always required a good understanding of color. Naturally during these decades many changes have taken place and the training given to students has had to keep pace with the times.

In 1956 the concept of a separate Color Measurements Laboratory at Clemson was adopted and this has grown into the present Color Science Center which is a part of the College of Industrial Management and Textile Science in the University. It is understandable that our major emphasis has been and will continue to be in the textile field, but we also serve the paper, plastics, paint and agricultural industries with training and advice.

In general the activities of the Color Science Center can be divided into two basic categories: education and service. During the past eight years about fifty undergraduates and 32 graduate students have taken one of the three one-semester courses in Color Science that are offered in the regular school term. In addition to formal course work, four of these students have completed their M.S. degrees with research done in the Color Science area. Another important educational program at Clemson is the short courses in Color Science which are now in their ninth year and have been attended by more than 450 postgraduate students representing almost all types of industries that have an interest in color.

The Color Science Center in its service capacity has helped industry as a source of technical advice and by the example of a model color laboratory. Consequently most of the investigative work done in the Center is traceable to industrial color problems such as lighting, fluorescence, colorant formulation and color control. This emphasis has been rewarded by continued interest on the part of both students and industry in our specialized activities.

GRAPHIC ARTS ODDITIES

The dream of Geoffrey Chaucer, English poet of the late 14th century, was to own 20 books rather than rich robes, a fiddle, or a psaltery.

In the middle of the 17th century, calendars with miscellaneous information and pious thoughts were printed. The oldest of this type, the Miner's Calendar, printed in Goslar in 1650, is still printed.

FRENCH papermakers of the mid-1700s considered that rags rotting in stone vats were ready for their use when mushrooms began sprouting.

Many of the colored papers from Korea were found in ancient Chinese temples, where they had been brought for the purpose of calligraphy, long before the Chinese knew the secret of coloring paper in the vat.

COMMITTEE ON PUBLICATIONS

Robert W. Burnham, Chairman
Milton J. Pearson
Ruth M. Johnston
Donald Genaro
William Benson
Robert T. Kintz

Send *Newsletter* Items to Editor:

Dr. Robert W. Burnham
Eastman Kodak Company
Research Laboratories, Bldg. 81
Rochester, N.Y. 14650

Other Correspondence to Secretary:

Dr. Fred W. Billmeyer, Jr.
Department of Chemistry
Rensselaer Polytechnic Institute
Troy, N.Y. 12181

Treasurer:

Mr. Warren B. Reese
1 Dogwood Lane
Newburgh, N.Y. 12550

NOTE:

The Council promotes color education by its association with the Cooper-Hewitt Museum. It recommends that intended gifts of historical significance, past or present, related to the artistic or scientific usage of color be brought to the attention of Christian Rohlfing, Cooper-Hewitt Museum, 9 East 90th Street, New York, New York 10028.